VERSATEX®
TRIMBOARD
Engineered forever.

STEALTH TRIM SYSTEM INSTALLATION GUIDELINES

GENERAL INFORMATION:

Versatex Stealth Trim System was designed and developed with a grooved pocket much like a "J" channel to accept nearly all siding products. Much like all Versatex PVC products the Stealth Trim System installs very similar to wood. The composition of the product allows it to be cut, routed, nailed and screwed just as any lumber product utilizing the same tools. The Stealth Trim System carries with it a fully-transferable 30-year warranty and does not need to be painted to prevent moisture damage causing rot and decay. For more information on painting or other installation questions, please visit our website www.versatex.com and go to the Product Specification tab and the section titled tech info/architectural specifications. Refer to Versatex standard installation guidelines for storage, handling and working with Versatex (Cutting, drilling, routing, bonding, filling, etc.).

STEALTH CORNERS:

Because of its unique design with a built in ¾" deep by ¾" wide pocket the Stealth Corner can accept nearly all siding products and works especially well with fiber cement and vinyl siding.

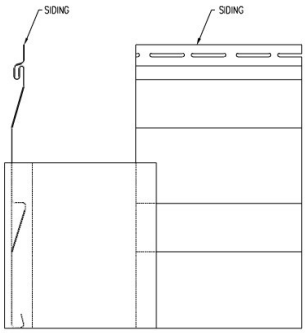

STEALTH CORNER
(4", 6", 8" APPLICATION)

INSTALLATION STEPS:

- ✓ Before installing your Stealth Corner, be sure the corner of the house is properly prepared to accept it. The corner of the building should be square, true and plumb and covered with some form of house wrap, or asphalt felt. The protective barrier should extend 4 to 6 inches beyond the outside edges of the corner.
- ✓ Before installing the corner, run a bead of sealant down the backside of both edges just inside the ¾ x ¾ pocket. The purpose of this sealant bead is to provide a positive seal as well as a dam which will prevent water or wind driven moisture from getting behind the corner.
- ✓ Nail the corner the same way you would a standard Versatex corner being sure not to nail through the overhang that conceals your siding. Although this overhang piece is ¼" thick, it may break if struck with a hammer. Use stainless steel or hot-dipped galvanized fasteners designed for wood trim and siding. Fasteners with thin shanks, blunt points, and full round heads are preferred. The fastener must be long enough to penetrate the substrate a minimum of 1 inch.
- ✓ Place nails a maximum of 24 inches on center. In order to minimize the potential for expansion or contraction, reduce the nail spacing to 16 inches on center.
- ✓ Install siding in accordance with the manufacturer's recommendations.

STEALTH WINDOW SURROUNDS:

Like the Stealth Corner, the Stealth Window Surround features a ¾" by ¾" pocket to accept siding products. Available in both a nominal 4" and 6" board, the Stealth Window Surrounds can be purchased either with or without a 1 7/8" x 3/16" nailing slot cut into the bottom of the trim piece to accept the flange on a new construction window. The Standard Stealth Window Surrounds do not have this nail flange cut out and is used

primarily for remodeling jobs where the perimeter trim is being replaced. A third option for your window surround trim is our trim with nail flange slot. This is typically used in non-siding applications where the builder prefers to butt up against the Versatex window trim.

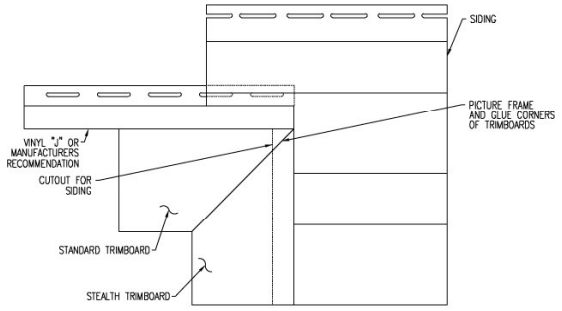

STEALTH WINDOW SURROUND

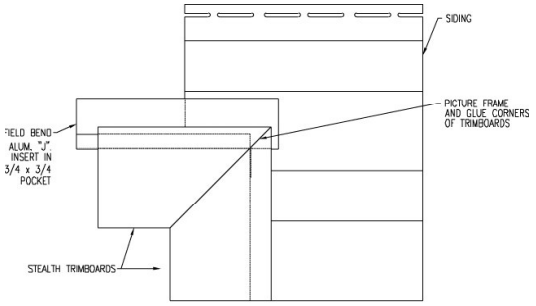

STEALTH WINDOW SURROUND

INSTALLATION STEPS:

- ✓ Before installing your Stealth Window Trim, be sure the window area is properly prepared to accept it. The window should be installed square, true and plumb with the area where the window is to be installed covered with house wrap. Apply a large bead of sealant around the window rough opening. Insert the window into the opening pressing the flanges into the bead of sealant.
- ✓ Once in place, cover the entire nail flange of the window with a rubberized asphalt flashing (i.e. Grace Vycor or equal). The flashing should extend out 4 to 6 inches from the frame of the window. Apply the flashing to the bottom of the window first, then to the jambs and finally across the head of the window overlapping the flashing at the four corners. At the window header, have the flashing fold over and onto the top of the window. This will keep stray rainwater from getting behind the window.
- ✓ Typical window nailing flanges are approximately 1/8" thick creating an irregular surface for the casing boards or window trim making Versatex's Stealth Trim System with it's 1 7/8" x 3/16" nail flange reveal ideal for this condition.
- ✓ Having measured the window, miter cut the Stealth Trim to create a picture frame look with the trim pieces. Before installing the Stealth Window Surround Trim, run a bead of sealant down the backside edge just inside the ¾ x ¾ pocket. The purpose of this sealant bead is to provide a positive seal of the trim to the wall of the house as well as a dam which will prevent water or wind driven moisture from working its way behind the trim.
- ✓ Nail the Stealth trim the same way you would standard Versatex trim, being sure not to nail through the overhang that conceals your siding. Although this overhang piece is ¼" thick, it may break if struck with a hammer. Use stainless steel or hot-dipped galvanized fasteners designed for wood trim and siding. Fasteners with thin shanks, blunt points, and full round heads are preferred. The fastener must be long enough to penetrate the substrate a minimum of 1 inch.
- ✓ Place nails a maximum of 24 inches on center. In order to minimize the potential for expansion or contraction, reduce the nail spacing to 16 inches on center.
- ✓ Continue installing the Stealth window trim gluing the mitered corners using a PVC adhesive like Weld-On 705 or equal.
- ✓ As a precautionary step, bend a piece of light gage aluminum into a "J" and place it in the pocket. Cut the aluminum "J" and bend the bottom of it 90 degrees so that it folds down about 1" into the ¾" pocket along both pieces of jamb trim.
- ✓ If you prefer not to use Stealth trim in the header, use a standard trim board with nail flange slot routing out the edge in the miter to accept the siding.
- ✓ Install the siding around the perimeter of the window in accordance with the manufacturer's installation guidelines.

For additional information on VERSATEX Trimboard products, please contact our Customer Service Department at:

Wolfpac Technologies, Inc.
111 Leetsdale Industrial Drive, Unit 101
Leetsdale, PA 15056
Tel. No. 724-266-7928
Fax. No. 724-266-7929
E-mail: sales@versatex.com

10/18/06